CC451,2,5,8HCL,CC455HCLDB
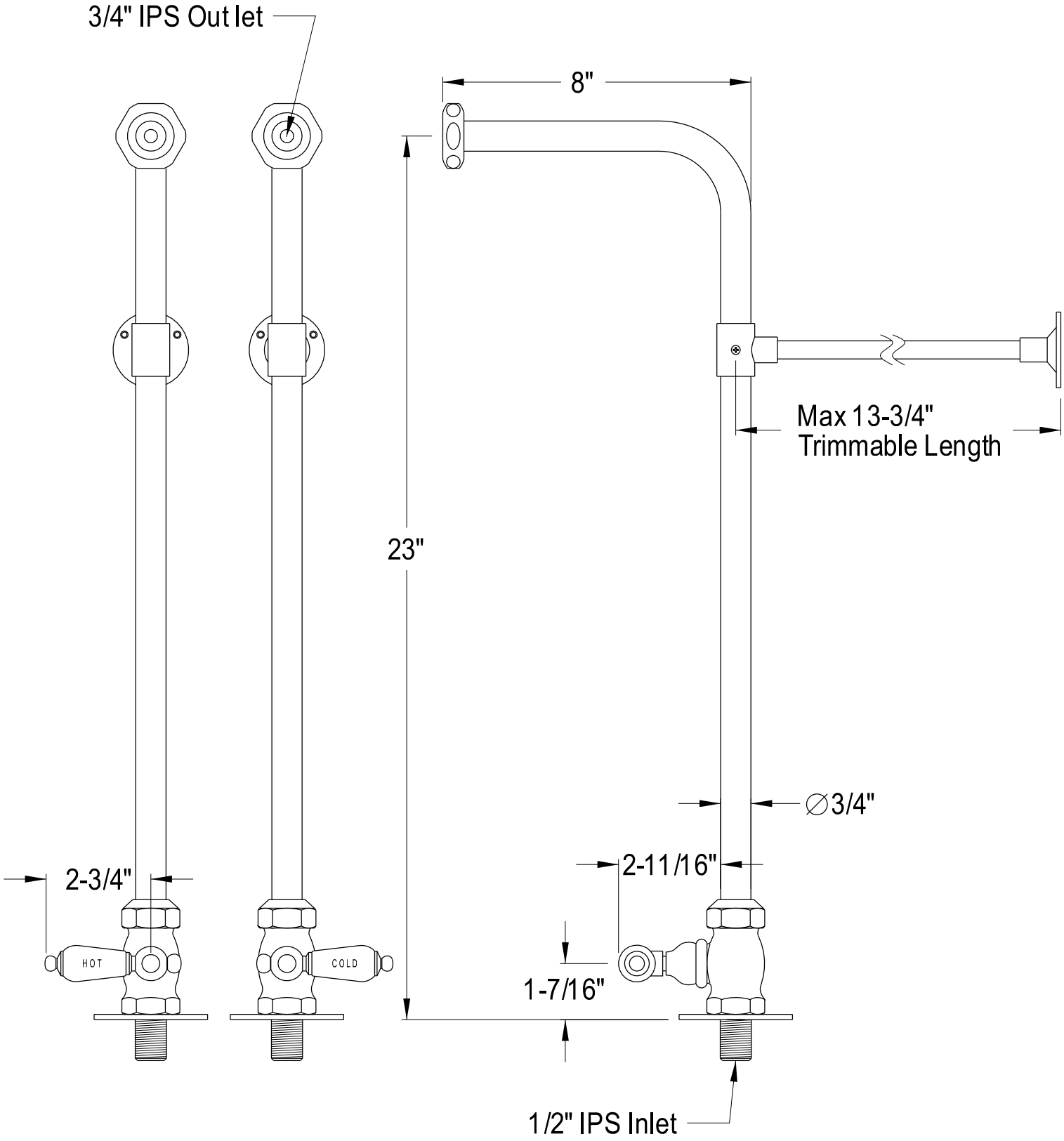
Rigid Freestand Supplies With Stops & Porcelain Lever Handles