CCK6171,2,5,8
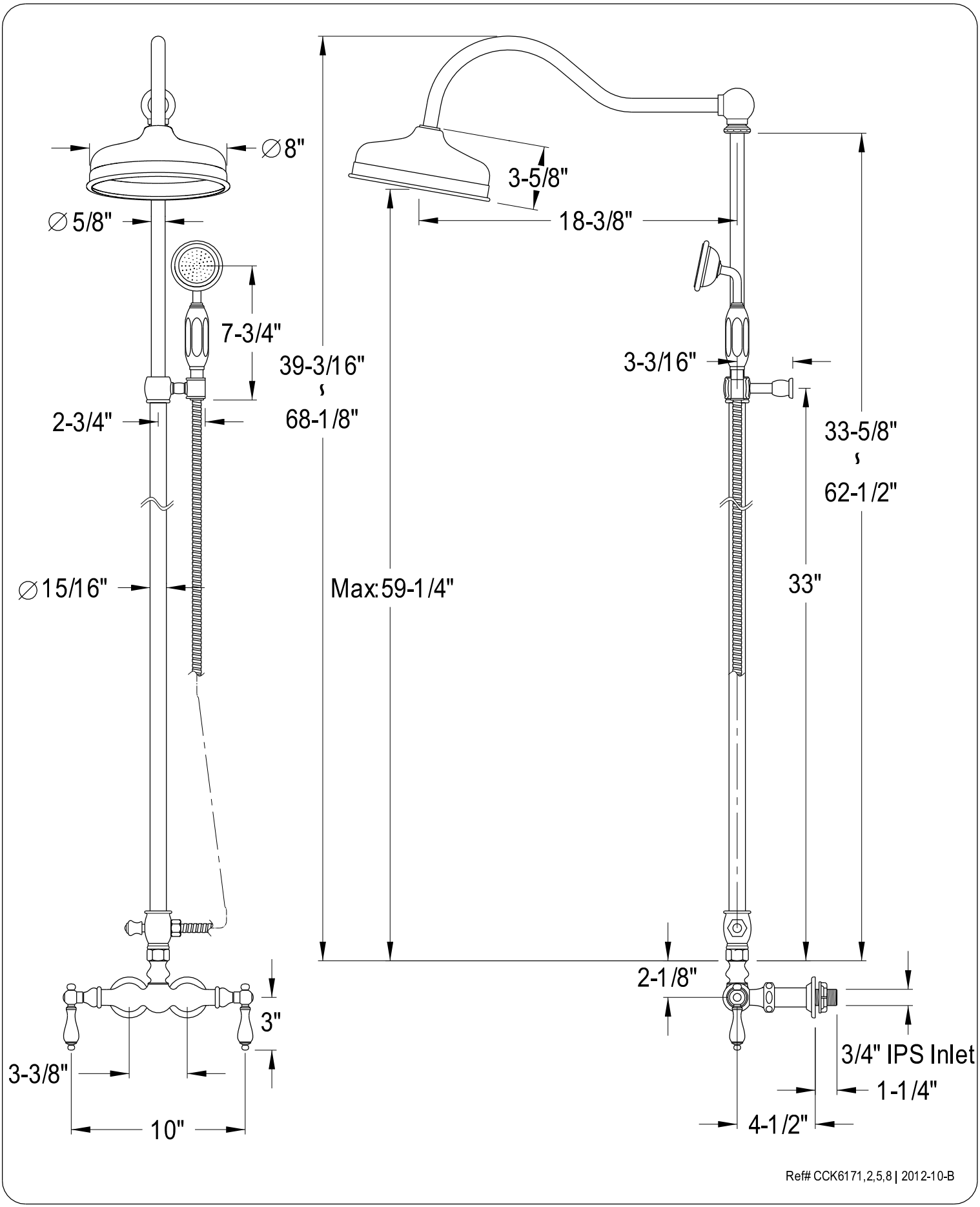
Wall Mount Shower Combo